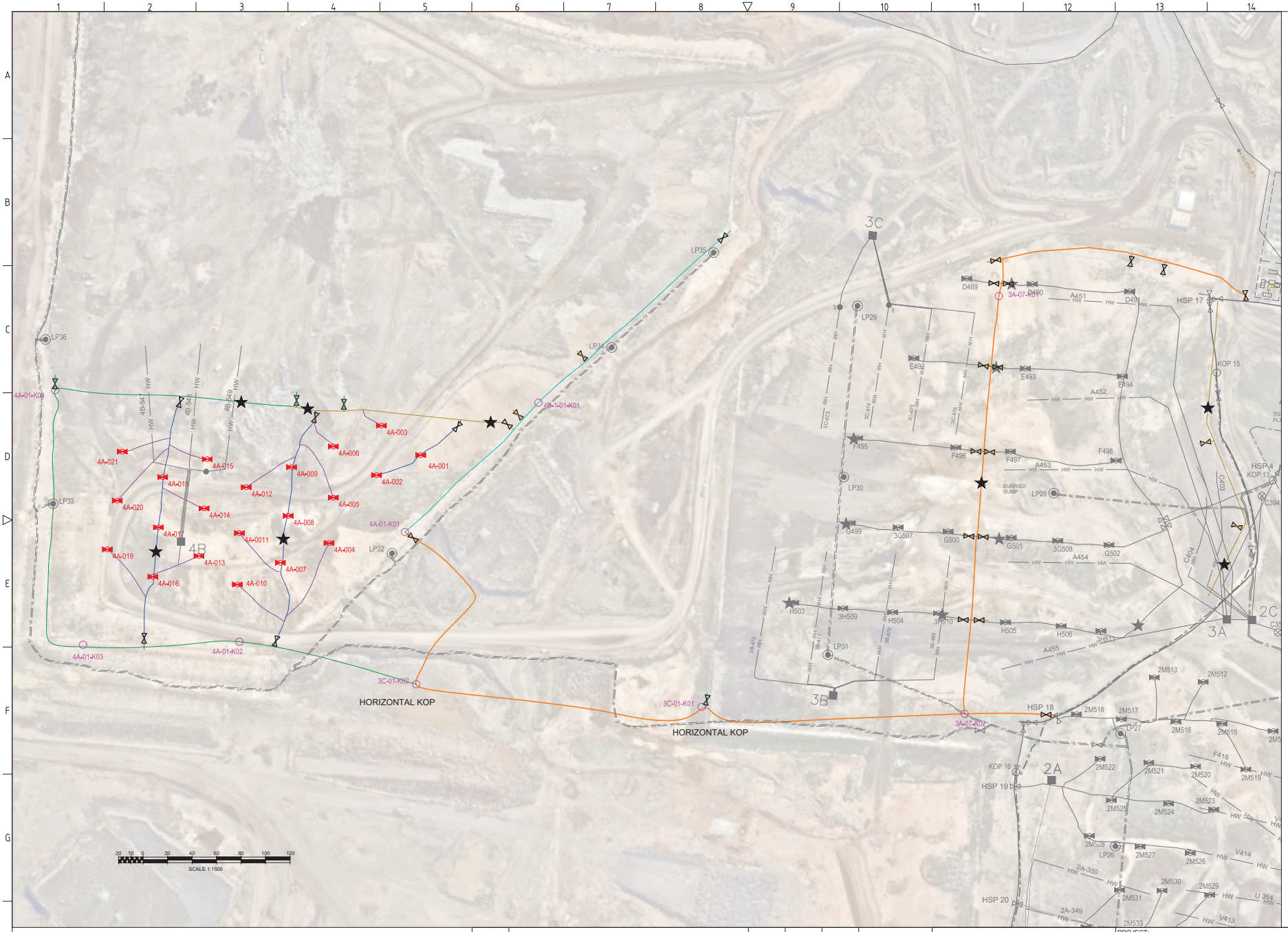

N

MAPPING INFORMATION	
Coordinate System:	Map Grid of Australia
Coordinate Units:	Metres
Zone:	55
NEARMAP INFORMATION	
Date:	17/02/2020

FIELD SUMMARY

	PIPE SIZE	LENGTH	ITEM	TOTAL
HORIZ WELL	63mm	0	Well	0
	90mm	0	Monitoring Bore	0
	110mm	0	Wellhead Station - Standard	0
	125mm	0	J Trap	0
	160mm	0	Barometric Trap	8
	200mm	0	Isolation Valve	31
FLOW	63mm	0	Pit Pumpout	0
	90mm	650	Leachate Sump / Riser Pipes	0
	110mm	0	Standalone Well	21
	125mm	0	Knock Out Pot	12
LATERAL	90mm	0	Dual Purpose Well	0
	125mm	0	Flare / Power Station	0
	160mm	490		
	200mm	0		
AIR	32mm	0		
	63mm	0		
LEACHATE	63mm	0		
	90mm	0		
	125mm	0		
	160mm	0		
MAIN HEADER	90mm	0		
	110mm	0		
	125mm	0		
	160mm	0		
	200mm	0		
	225mm	937		
	250mm	183		
	280mm	0		
	315mm	327		
	355mm	0		
	400mm	0		
	450mm	1350		
	500mm	0		

LEGEND

- Well
- Monitoring Bore
- Wellhead Station - Standard
- J Trap
- Barometric Trap
- Isolation Valve
- Pit Pumpout
- Leachate Sump / Riser Pipes
- Standalone Well
- KOP Knock Out Pot
- Dual Purpose Well
- Flare / Power Station
- A Wellhead Station Name
- A125 Well Number
- MP1–1 Main Gas Pipe
- Fence Line
- Cell Boundary
- Communication
- Power
- 63mm Flow Line
- 32mm Air Line
- 63mm Air Line
- 63mm Leachate Line
- 90mm Leachate Line
- 110mm Leachate Line
- 125mm Leachate Line
- 160mm Leachate Line
- 90mm Horizontal Well
- 90mm Main/Lateral Header
- 125mm Main/Lateral Header
- 140mm Main/Lateral Header
- 160mm Main/Lateral Header
- 200mm Main Header
- 225mm Main Header
- 250mm Main Header
- 280mm Main Header
- 315mm Main Header
- 355mm Main Header
- 400mm Main Header
- 450mm Main Header
- 500mm Main Header

REV	DESCRIPTION	BY	CKD	APP	DATE
E					
D					
C					
B					
A	GCS INSTALLATION	ZB	RC	RC	4/06/2020

REVISION HISTORY

runenergy

199C OSBORNE AVE, CLAYTON STH, VIC 3169
PH: (03) 9538 6200
www.runenergy.com

PROJECT: Melbourne Regional Landfill

DRAWING TITLE: Gas Collection System Installation

DRAWING No: 015-DN-003

DRAWING TYPE: DESIGN

DRAWN: ZB		CKD: RC	
DATE: 04/06/2020		APP: RC	
DESIGNED: RB		APP DATE: 04.06.2020	
SCALE: DNS	SHEET: 1 of 1	REV: A	SIZE: A1

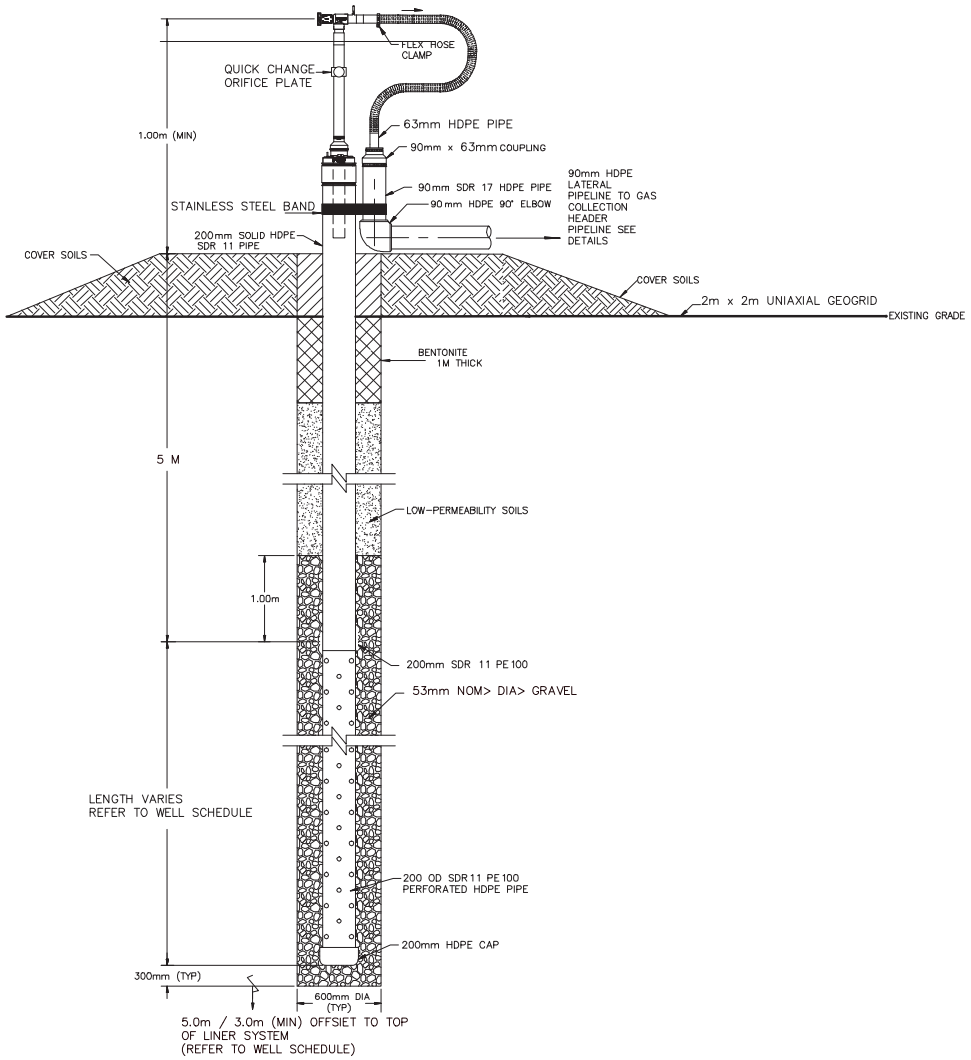

VERTICAL EXTRACTION WELL DETAIL

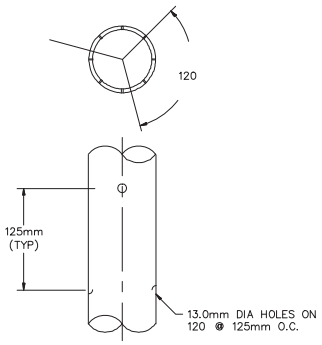

PERFORATION PATTERN

DRAWING NOT TO SCALE

The information included on this graphic representation has been compiled from a variety of sources and is subject to change without notice. The provider of this document makes no representations or warranties, express or implied, as to, accuracy, completeness, timeliness, or rights to the use of such information. This document is not intended for use as a land survey product. The use or misuse of the information contained on this graphic is at the sole risk of the party using or misusing the information.

REV	DESCRIPTION	DRAWN	CHKD	APP	DATE
B	FOR TENDER	R.H.	M.W.	M.W.	04/04/2020

PAPER SIZE: A3

© Resolve Environmental Pty Ltd
144 Church Street
Brighton VIC 3186
ph: (03) 9595 3530
e: info@resolveenvironmental.com.au

VERTICAL EXTRACTION WELL

TASK 2 GCCS DESIGN

MELBOURNE REGIONAL LANDFILL

Project no. P001110-010-02

Drawing no. D001110-010-02.07B

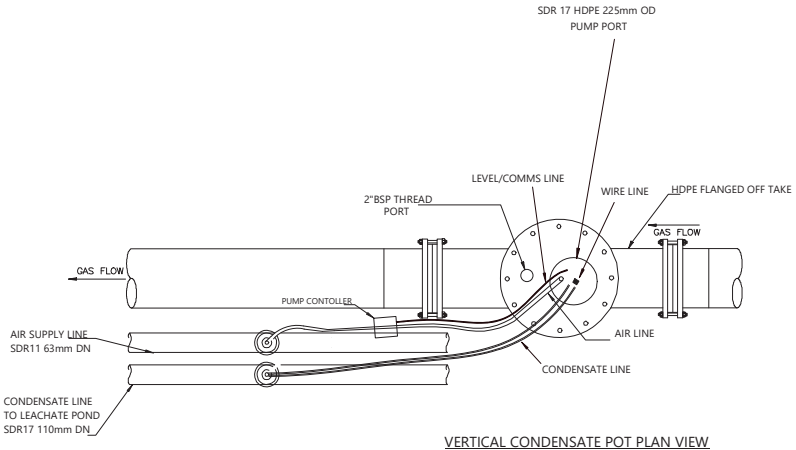

VERTICAL CONDENSATE POT PLAN VIEW

NOT TO SCALE

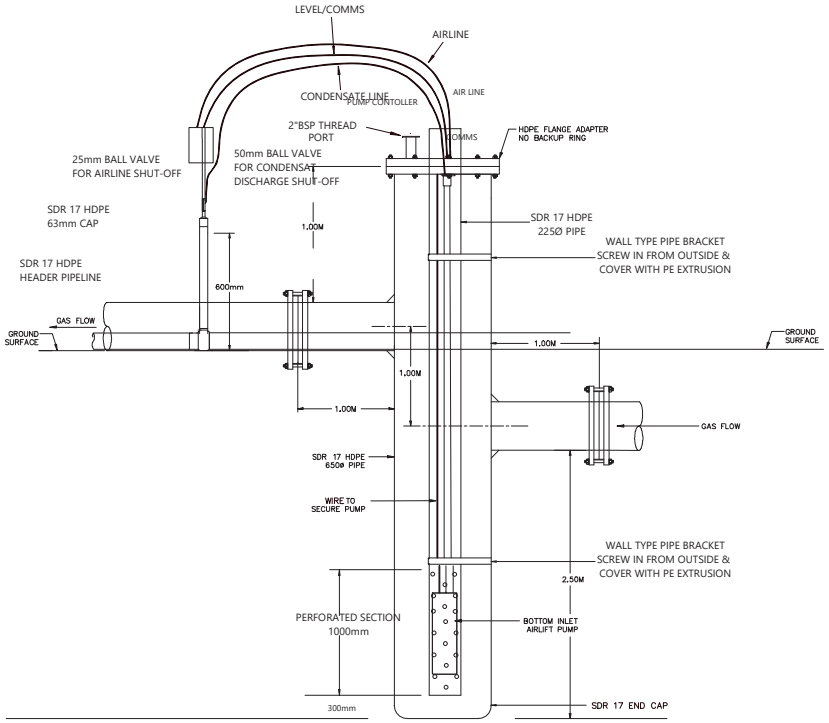

VERTICAL CONDENSATE POT ELEVATION VIEW

The information included on this graphic representation has been compiled from a variety of sources and is subject to change without notice. The provider of this document makes no representations or warranties, express or implied, as to, accuracy, completeness, timeliness, or rights to the use of such information. This document is not intended for use as a land survey product. The use or misuse of the information contained on this graphic is at the sole risk of the party using or misusing the information.

REV	DESCRIPTION	DRAWN	CHKD	APP	DATE
B	FOR TENDER	R.H.	M.W.	M.W.	04/04/2020

PAPER SIZE: A3

© Resolve Environmental Pty Ltd
144 Church Street
Brighton VIC 3186
ph: (03) 9595 3530
e: info@resolveenvironmental.com.au

Resolve Environmental

VERTICAL KNOCK OUT POT

TASK 2 GCCS DESIGN

MELBOURNE REGIONAL LANDFILL

Project no.
P001110-010-02

Drawing no.
D001110-010-02.08B

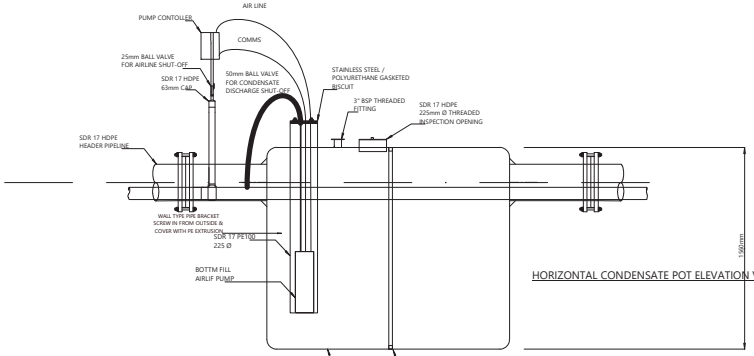

HORIZONTAL CONDENSATE POT ELEVATION VIEW

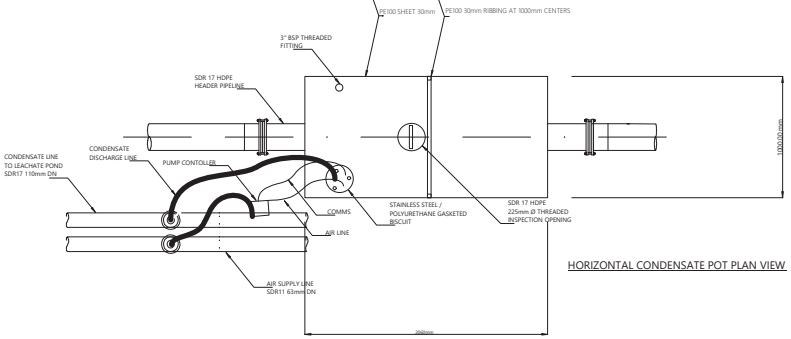

HORIZONTAL CONDENSATE POT PLAN VIEW

NOT TO SCALE

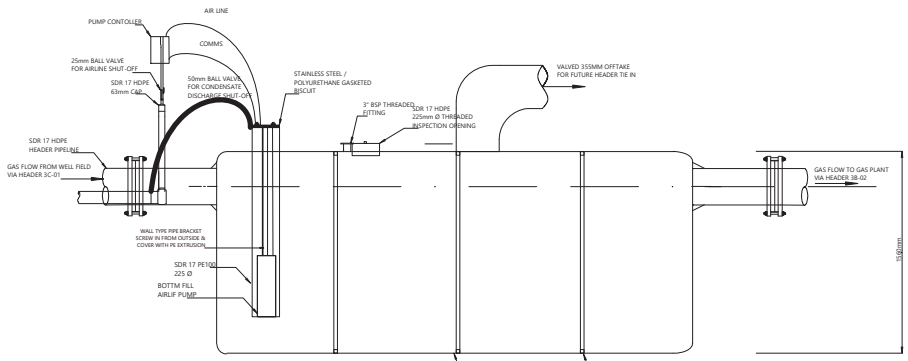

HORIZONTAL CONDENSATE POT: 3C-01-K01
ELEVATION VIEW

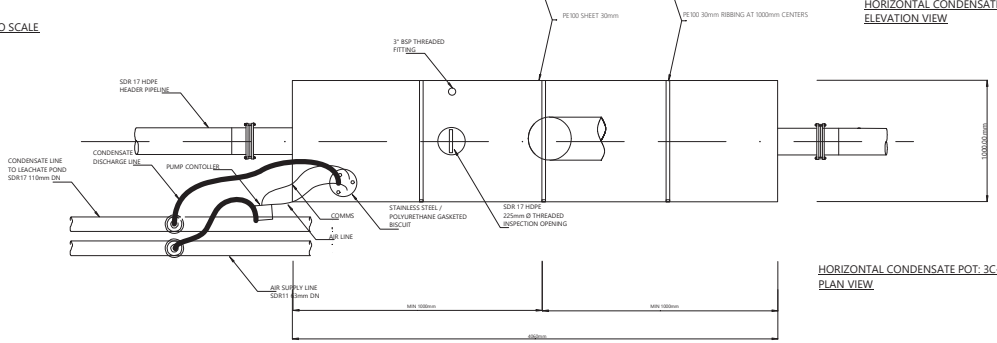

HORIZONTAL CONDENSATE POT: 3C-01-K01
PLAN VIEW

The information included on this graphic representation has been compiled from a variety of sources and is subject to change without notice. The provider of this document makes no representations or warranties, express or implied, as to, accuracy, completeness, timeliness, or rights to the use of such information. This document is not intended for use as a land survey product. The use or misuse of the information contained on this graphic is at the sole risk of the party using or misusing the information.

REV	DESCRIPTION	DRAWN	CHKD	APP	DATE
B	FOR TENDER	R.H.	M.W.	M.W.	04/04/2020

PAPER SIZE: A3

© Resolve Environmental Pty Ltd
144 Church Street
Brighton VIC 3186
ph: (03) 9595 3530
e: info@resolveenvironmental.com.au

Resolve Environmental

HORIZONTAL KNOCK OUT POT

TASK 2 GCCS DESIGN

MELBOURNE REGIONAL LANDFILL

Project no.
P001110-010-02

Drawing no.
D001110-010-02.09B

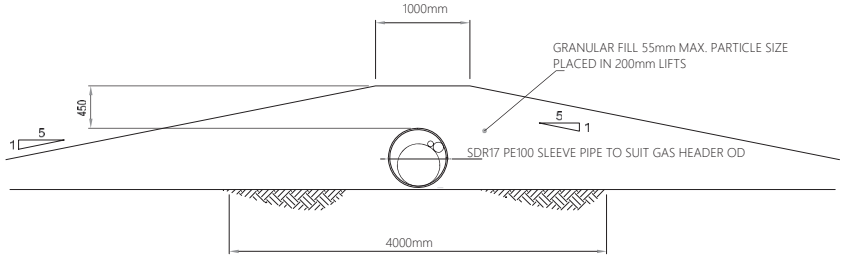

SECTION 1 -

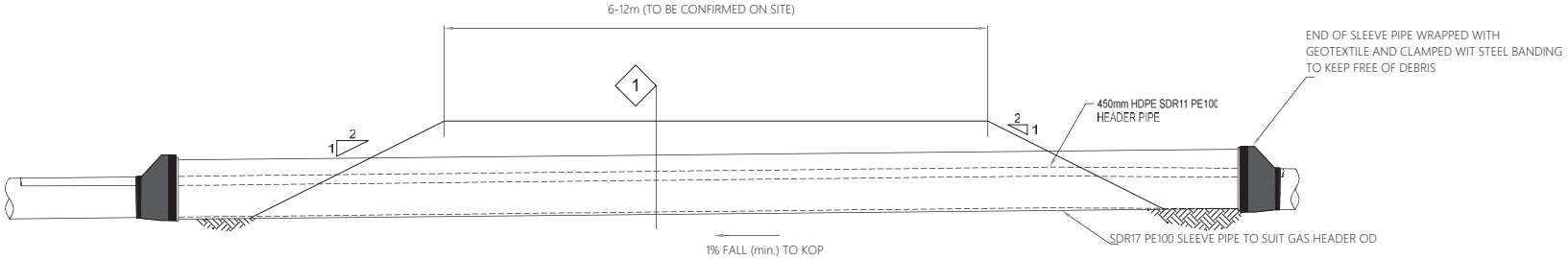

TEMPORARY ROAD CROSSING

The information included on this graphic representation has been compiled from a variety of sources and is subject to change without notice. The provider of this document makes no representations or warranties, express or implied, as to, accuracy, completeness, timeliness, or rights to the use of such information. This document is not intended for use as a land survey product. The use or misuse of the information contained on this graphic is at the sole risk of the party using or misusing the information.

REV	DESCRIPTION	DRAWN	CHKD	APP	DATE
B	FOR TENDER	R.H.	M.W.	M.W.	04/04/2020

PAPER SIZE: A3

© Resolve Environmental Pty Ltd
144 Church Street
Brighton VIC 3186
ph: (03) 9595 3530
e: info@resolveenvironmental.com.au

Resolve Environmental

TEMPORARY ROAD CROSSING

TASK 2 GCCS DESIGN

MELBOURNE REGIONAL LANDFILL

Project no.
P001110-010-02

Drawing no.
D001110-010-02.10B

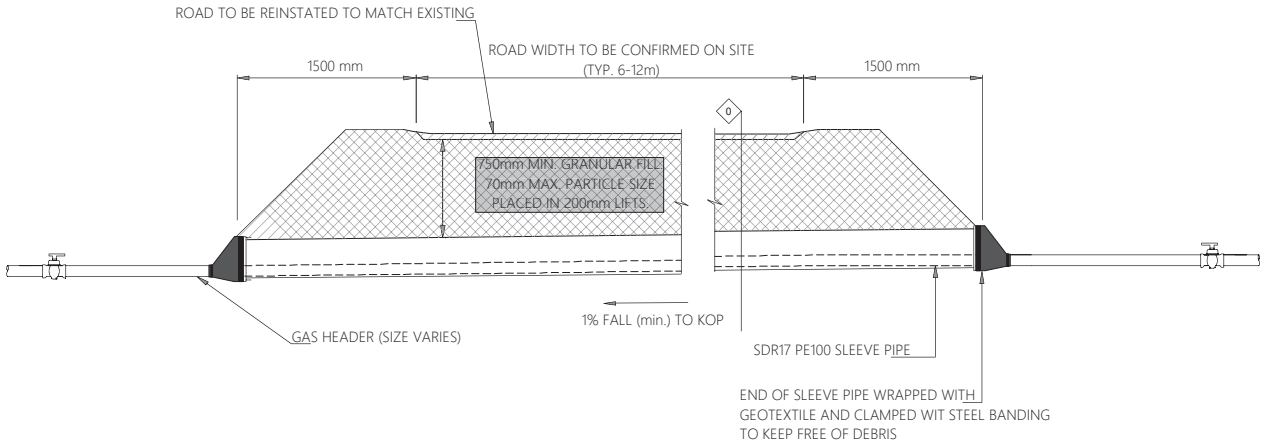

PERMANENT ROAD CROSSING

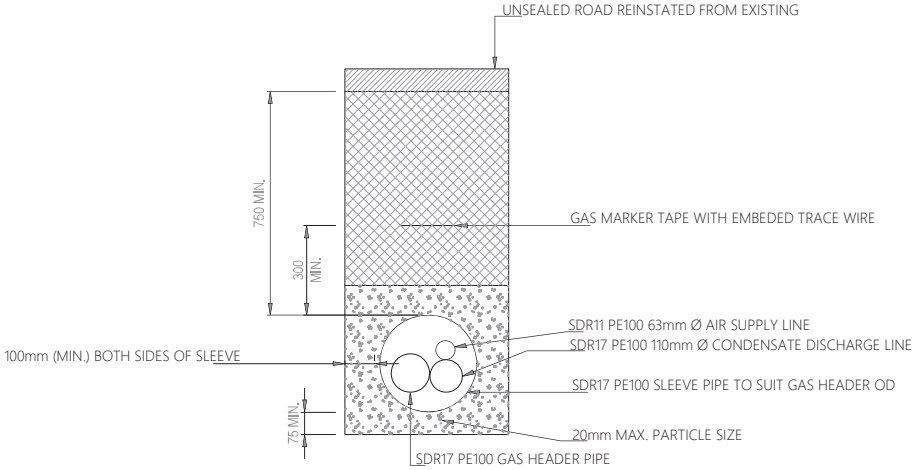

SECTION 0 - PERMANENT ROAD CROSSING

The information included on this graphic representation has been compiled from a variety of sources and is subject to change without notice. The provider of this document makes no representations or warranties, express or implied, as to, accuracy, completeness, timeliness, or rights to the use of such information. This document is not intended for use as a land survey product. The use or misuse of the information contained on this graphic is at the sole risk of the party using or misusing the information.

REV	DESCRIPTION	DRAWN	CHKD	APP	DATE
B	FOR TENDER	R.H.	M.W.	M.W.	04/04/2020

PAPER SIZE: A3

© Resolve Environmental Pty Ltd
144 Church Street
Brighton VIC 3186
ph: (03) 9595 3530
e: info@resolveenvironmental.com.au

Resolve Environmental

PERMANENT ROAD CROSSING

TASK 2 GCCS DESIGN

MELBOURNE REGIONAL LANDFILL

Project no. P001110-010-02

Drawing no. D001110-010-02.11B

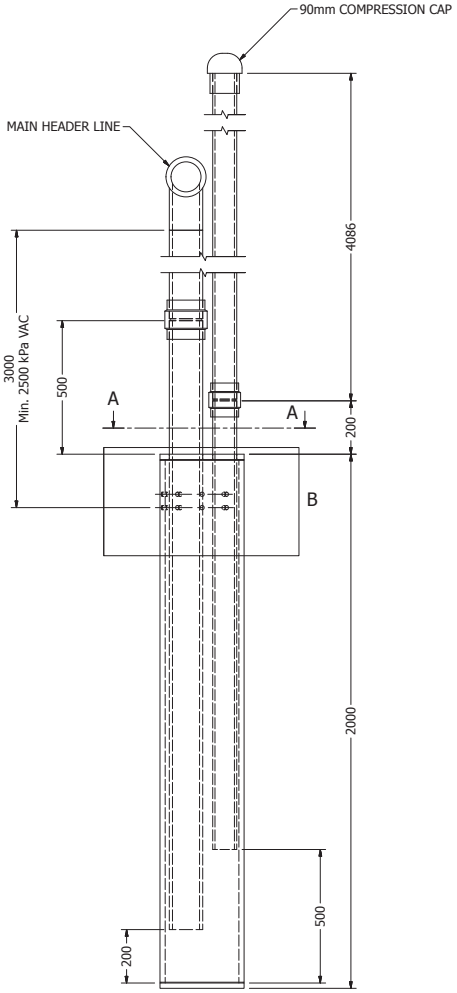

FRONT ELEVATION
SCALE (DNS)

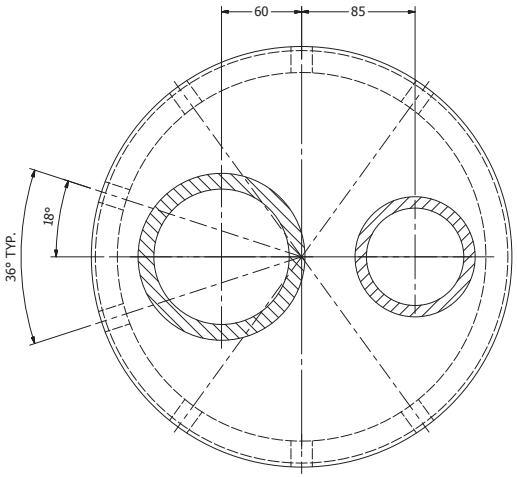

SECTION A-A
SCALE (DNS)

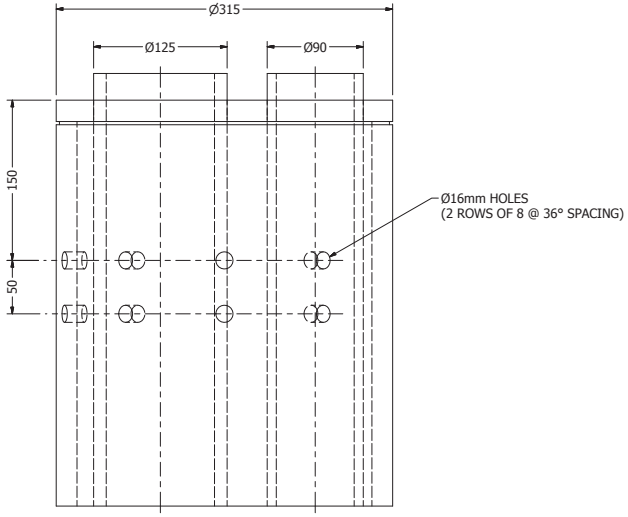

DETAIL B
SCALE (DNS)

REV	DESCRIPTION	BY	CHECKED	APPROVED	DATE
A	GENERAL ARRANGEMENT - FOR REVIEW	BC	LB	LB	9/10/2018

REVISION HISTORY

runenergy
199C Osborne Avenue
Clayton South, VIC, 3169 AUST.
www.runenergy.com TEL: (03) 9538 6200

DRAWN	DESIGN	APP
BC	BC	LB
DATE 9/10/2018	DATE 9/10/2018	DATE 9/10/2018

PROJECT: RUN ENERGY GENERAL ARRANGEMENT

DRAWING TITLE: BAROMETRIC TRAP

SCALE	DRAWING NUMBER	SHEET	REV	SIZE
DNS	RE_LFG_005	1 OF 1	A	A1